SYSTEM WIRING DIAGRAMS

Fig. 51: Heated Seats Circuit

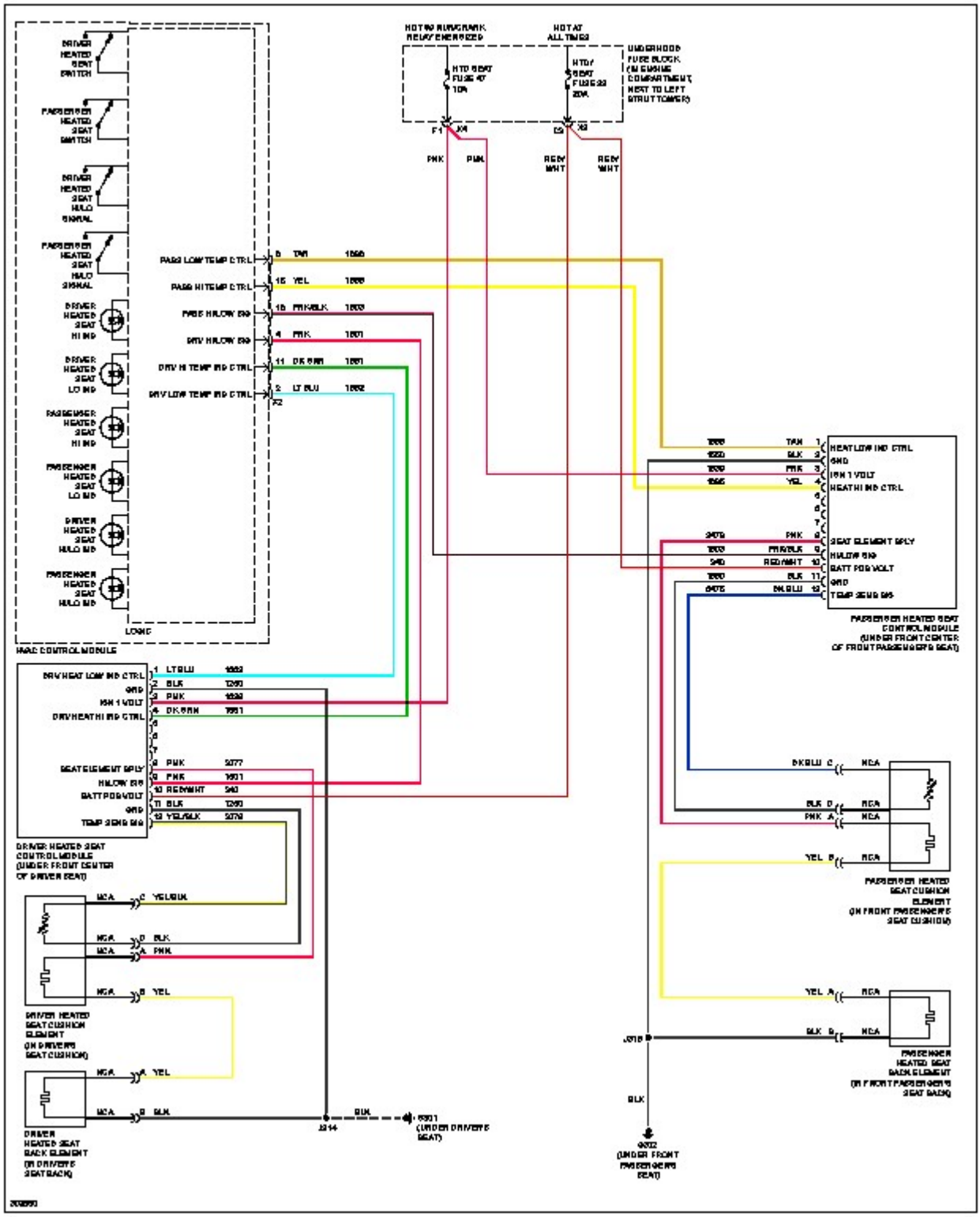

 © 2011 Mitchell Repair Information Company, LLC.