Fig. 1: Compressor Circuit

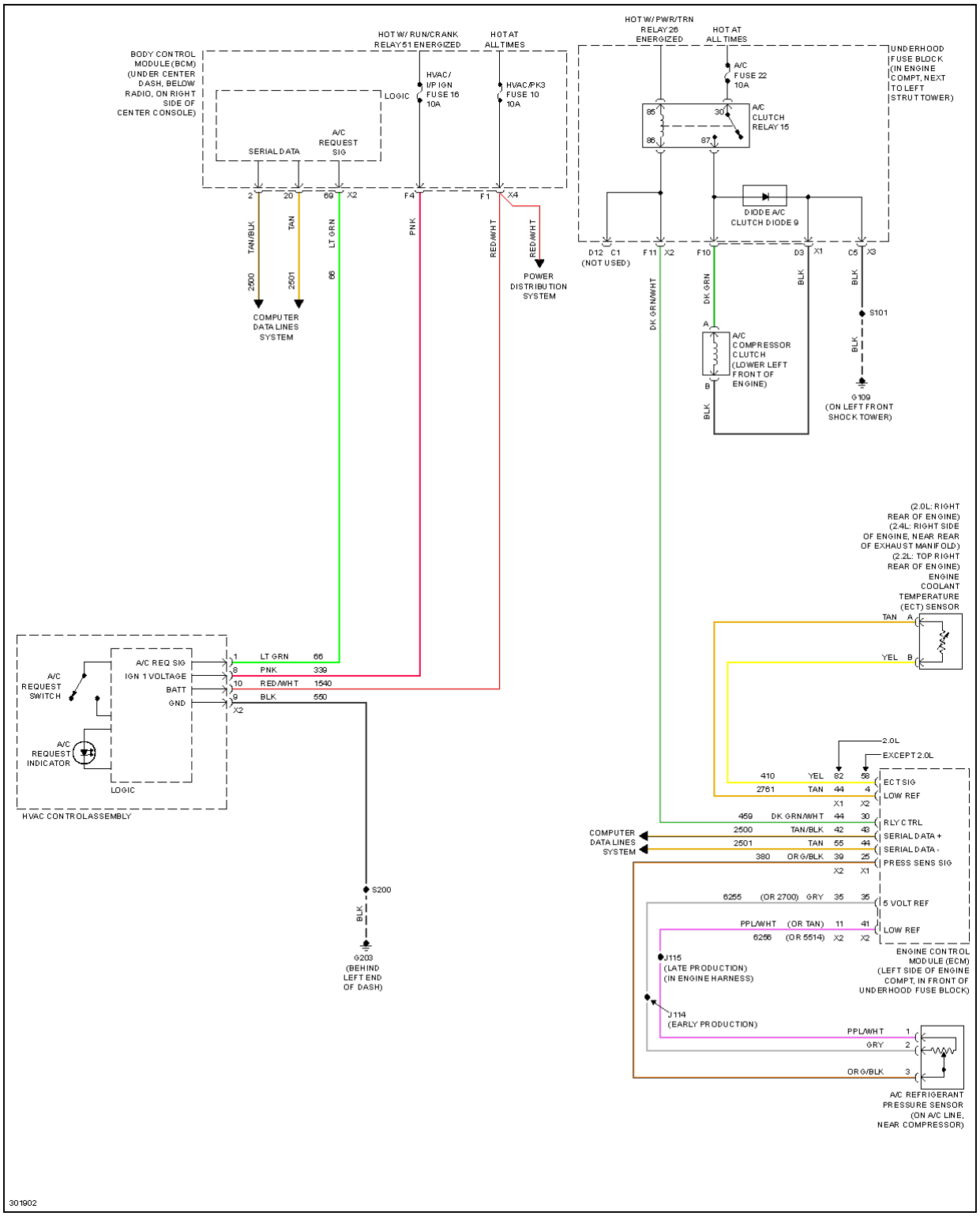

© 2011 Mitchell Repair Information Company, LLC.