Fig. 2: Manual A/C Circuit (1 of 2)

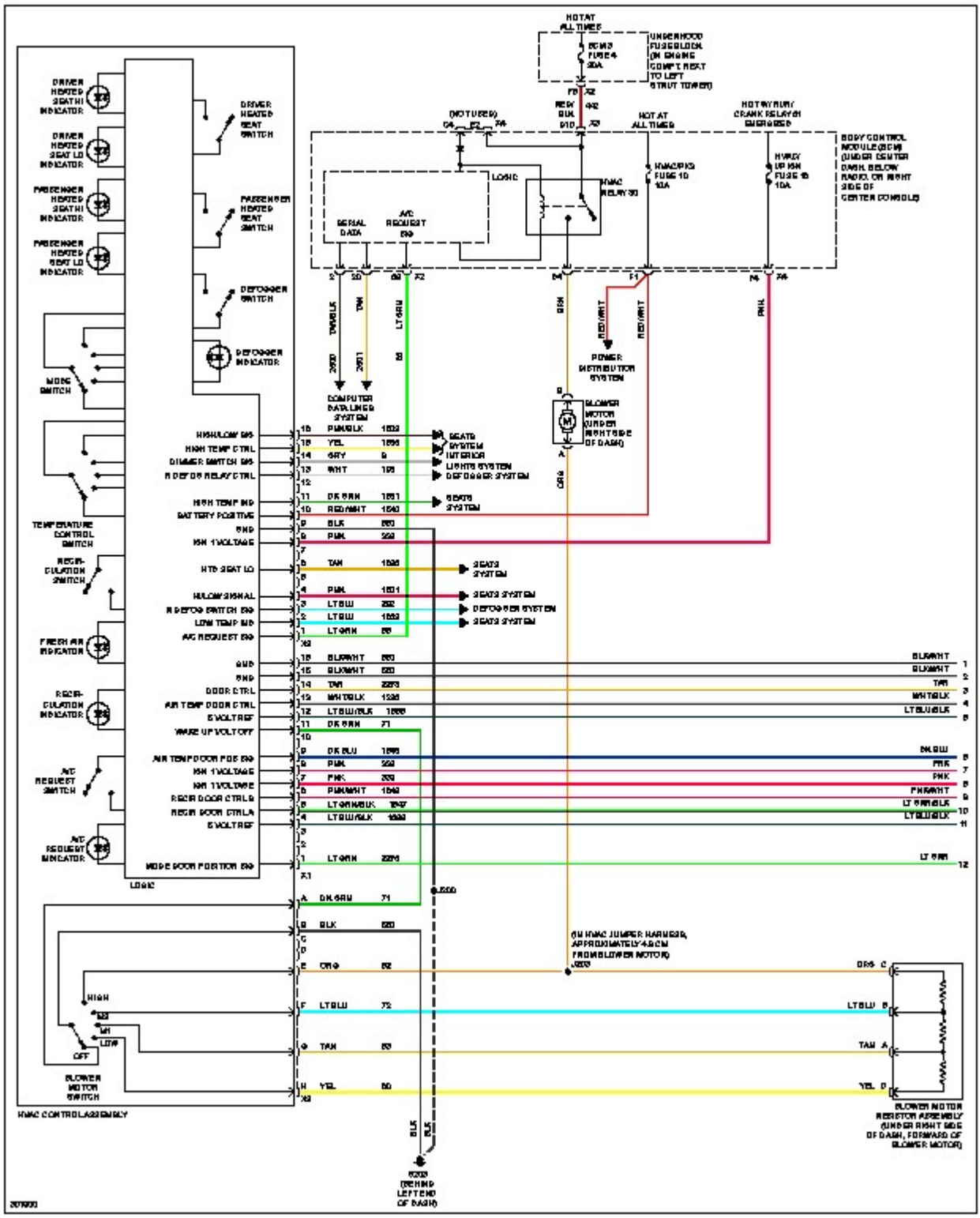

© 2011 Mitchell Repair Information Company, LLC.