Fig. 53: Power Windows Circuit

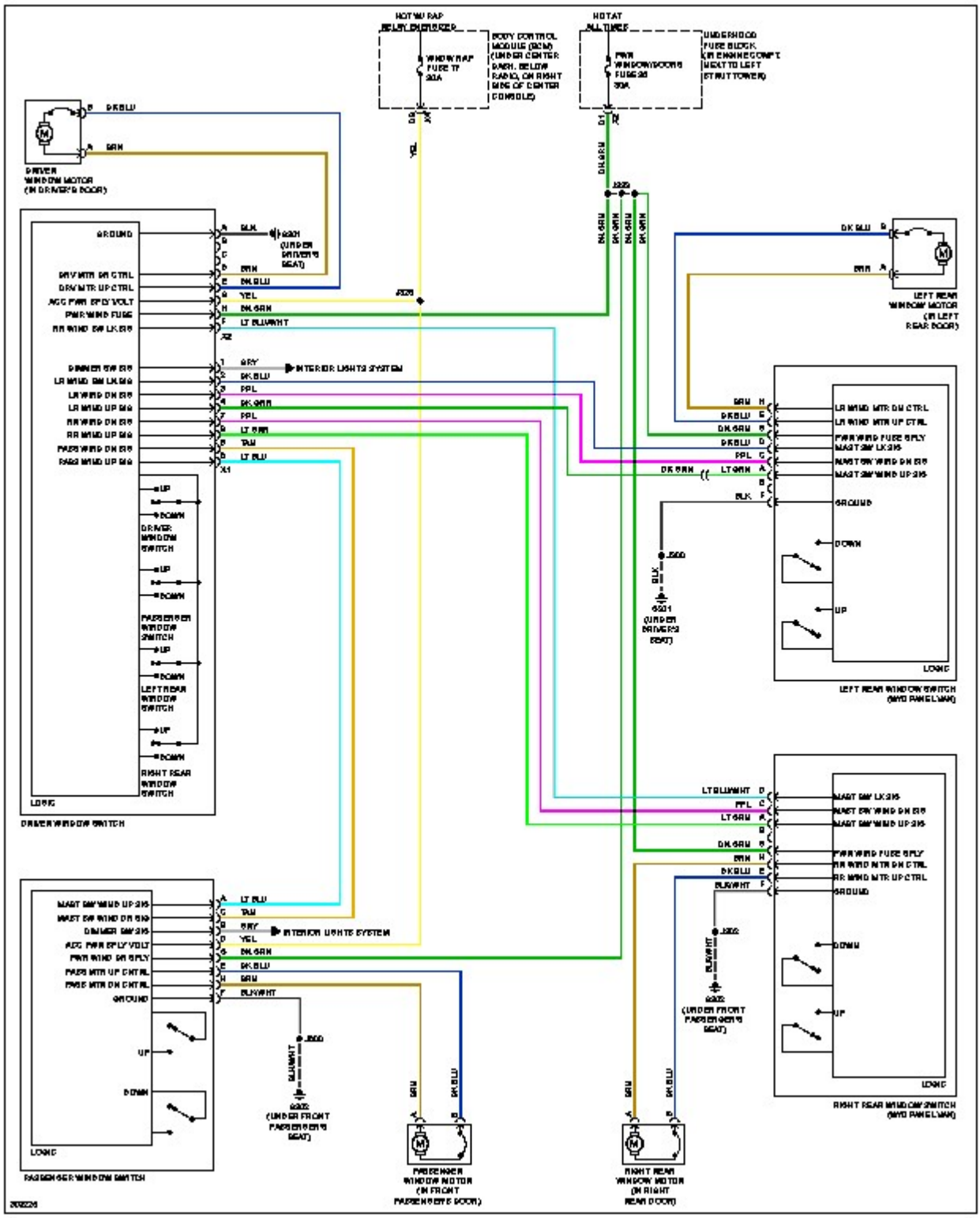

 © 2011 Mitchell Repair Information Company, LLC.